Energy

Gravitational potential energy and kinetic energy

Year 10

Q1.

(a) **Figure 1** shows the forces acting on a model air-powered rocket just after it has been launched vertically upwards.

Figure 1

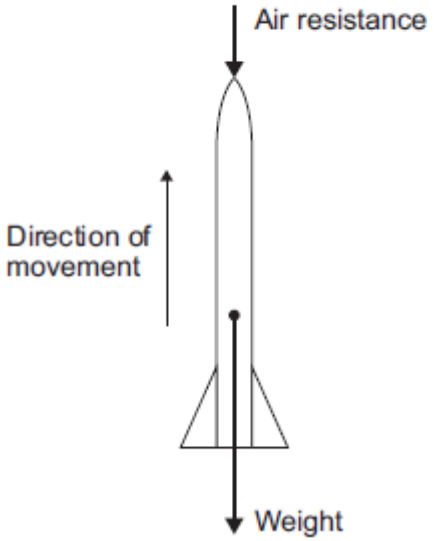

(i) How does the velocity of the rocket change as the rocket moves **upwards**?

_____

Give a reason for your answer.

_____

_____

(2)

(ii) The velocity of the rocket is not the same as the speed of the rocket.

What is the difference between the velocity of an object and the speed of an object?

_____

_____

_____

(1)

(b) The speed of the rocket just after being launched is 12 m / s.
The mass of the rocket is 0.05 kg.

(i) Calculate the kinetic energy of the rocket just after being launched.

_____

_____

_____

Kinetic energy = _____ J

(2)

(ii) As the rocket moves upwards, it gains gravitational potential energy.

State the maximum gravitational potential energy gained by the rocket.

Ignore the effect of air resistance.

Maximum gravitational potential energy = _____ J

(1)

(iii) Calculate the maximum height the rocket will reach.

Ignore the effect of air resistance.

Gravitational field strength = 10 N/kg.

_____

_____

_____

Maximum height = _____ m

(2)

(iv) **Figure 2** shows four velocity−time graphs.

Figure 2

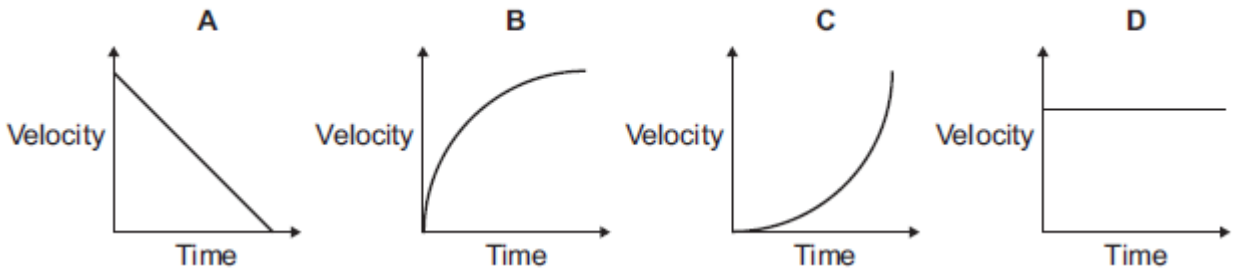

Taking air resistance into account, which graph, **A**, **B**, **C** or **D**, shows how the velocity of the rocket changes as it **falls** from the maximum height it reached until it just hits the ground?

Write the correct answer in the box. ☐

(1)

(c) The rocket can be launched at different angles to the horizontal.
The horizontal distance the rocket travels is called the range.

Figure 3 shows the paths taken by the rocket when launched at different angles.
Air resistance has been ignored.

Figure 3

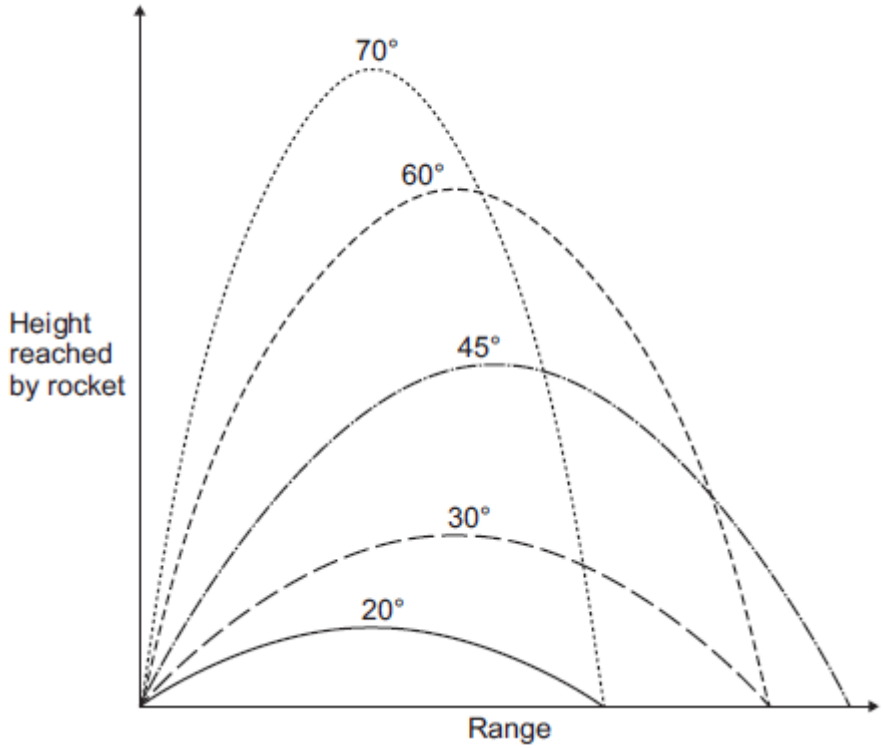

What pattern links the angle at which the rocket is launched and the range of the rocket?

_____

_____

_____

_____

(2)
(Total 11 marks)

Q2.

The diagram below shows a cyclist riding along a flat road.

(a) Complete the sentence.

Choose answers from the box.

chemical	**elastic potential**	**gravitational potential**	**kinetic**

As the cyclist accelerates, the _____ energy store in the cyclist's body decreases and the _____ energy of the cyclist increases.

(2)

(b) The mass of the cyclist is 80 kg. The speed of the cyclist is 12 m/s.

Calculate the kinetic energy of the cyclist.

Use the equation:

$$\text{kinetic energy} = 0.5 \times \text{mass} \times (\text{speed})^2$$

_____

_____

_____

_____

Kinetic energy = _____ J

(2)

(c) When the cyclist uses the brakes, the bicycle slows down.

This causes the temperature of the brake pads to increase by 50 °C.
The mass of the brake pads is 0.040 kg.
The specific heat capacity of the material of the brake pads is 480 J/kg °C.

Calculate the change in thermal energy of the brake pads.

Use the equation:

change in thermal energy = mass × specific heat capacity × temperature change

_____

_____

_____

Change in thermal energy = _____ J

(2)

(d) How is the internal energy of the particles in the brake pads affected by the increase in temperature?

Tick **one** box.

Decreased ☐

Increased ☐

Not affected ☐

(1)

(Total 7 marks)

Q3.

The diagram shows a tennis ball thrown vertically into the air.

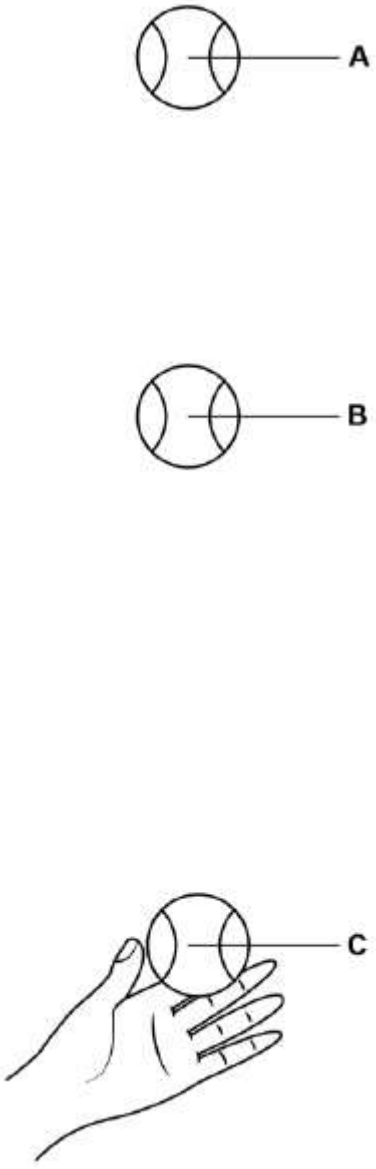

At position **C**, the ball has just left the tennis player's hand at a speed of 5.0 m/s

The tennis ball has a mass of 0.058 kg

(a) Write down the equation that links kinetic energy, mass and speed.

_____

(1)

(b) Calculate the kinetic energy of the tennis ball at position **C**.

_____

_____

Kinetic energy = _____ J

(2)

(c) At position **A** the tennis ball is at maximum height.

What is the gravitational potential energy of the tennis ball at position **A**?

Ignore the effect of air resistance.

_____

(1)

At position **B** the tennis ball has 0.38 J of gravitational potential energy.

(d) Write down the equation that links gravitational field strength, gravitational potential energy, height and mass.

_____

(1)

(e) Calculate the height of the tennis ball above the tennis player's hand when at position **B**.

gravitational field strength = 9.8 N/kg

_____

_____

_____

_____

_____

Height = _____ m

(3)

(Total 8 marks)

Q4.

A student did an experiment to calculate her power.
The diagram below shows how she obtained the measurements needed.

The student first weighed herself and then ran up a flight of stairs. A second student timed how long it took her to go from the bottom to the top of the stairs. The height of the stairs was also measured.

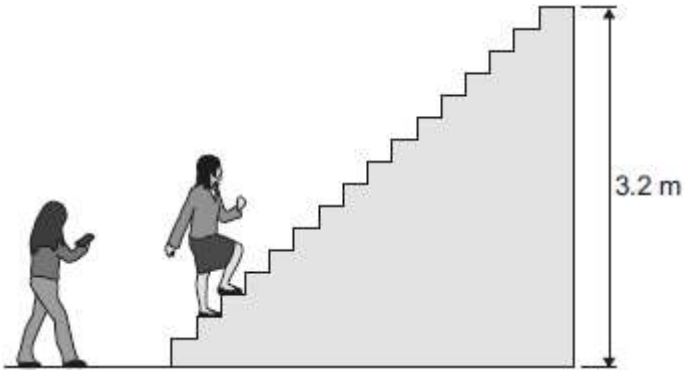

(a) Complete the following sentence.

To run up the stairs the student must do work against

the force of _____ .

(1)

(b) The student did 2240 J of work going from the bottom of the stairs to the top of the stairs.

The student took 2.8 seconds to run up the stairs.

(i) Calculate the power the student developed when running up the stairs.

_____

_____

Power = _____ W

(2)

(ii) How much gravitational potential energy did the student gain in going from the bottom to the top of the stairs?

Tick (✓) **one** box.

much more than 2240 J	☐
2240 J	☐
much less than 2240 J	☐

(1)

(c) Another four students did the same experiment.

The measurements taken and the calculated values for power are given in the table.

Student	Weight in	Time taken in	Power in

	newtons	seconds	watts
A	285	3.8	240
B	360	2.4	480
C	600	3.4	560
D	725	4.0	580

(i) To make a fair comparison of their powers the students kept **one** variable in the experiment constant.

What variable did the students keep constant?

_____

(1)

(ii) From the data in the table a student wrote the following conclusion.

'The greater the weight of the student the greater the power developed.'

Suggest why this conclusion may **not** be true for a larger group of students.

_____

_____

(1)

(Total 6 marks)

Q5.

The image below shows a student before and after a bungee jump.

The bungee cord has an unstretched length of 20 m.

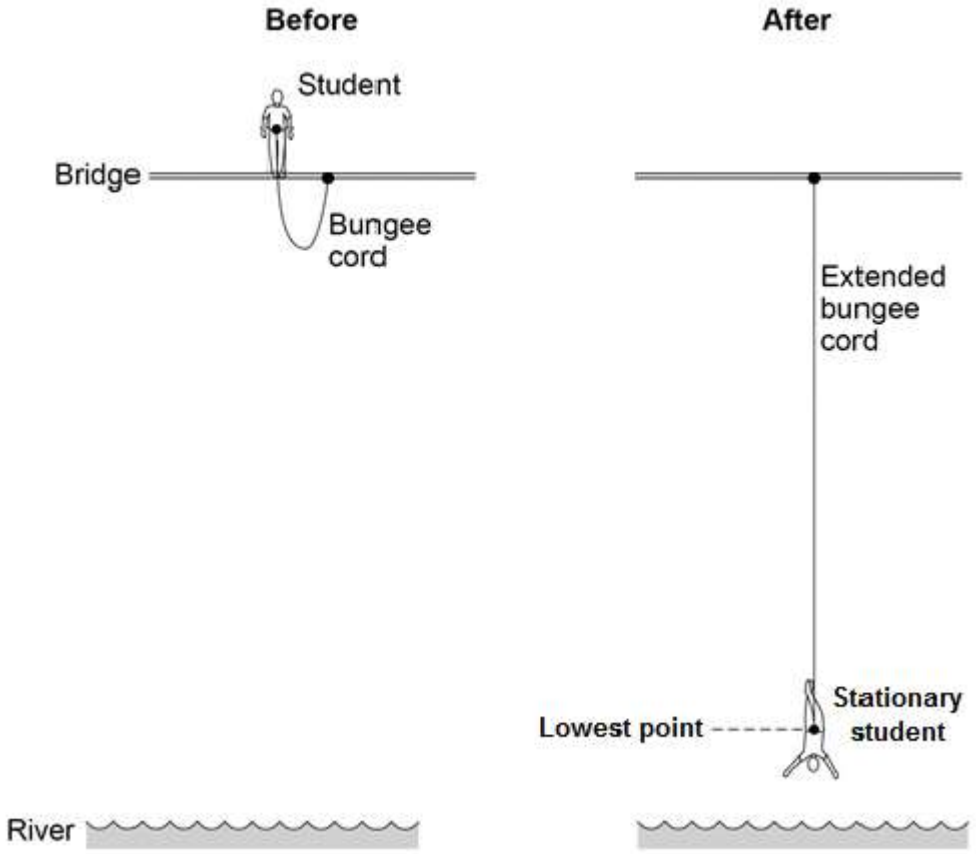

(a) For safety reasons, it is important that the bungee cord used is appropriate for the student's weight.

Give **two** reasons why.

1. _____

_____

2. _____

_____

(2)

(b) The student jumps off the bridge.

Complete the sentences to describe the energy transfers.

Use answers from the box.

elastic potential **gravitational** **potential** **kinetic** **sound** **thermal**

Before the student jumps from the bridge he has a store of

_____ energy.

When he is falling, the student's store of _____

energy increases.

When the bungee cord is stretched, the cord stores energy as

_____ energy.

(3)

(c) At the lowest point in the jump when the student is stationary, the extension of the bungee cord is 35 metres.

The bungee cord behaves like a spring with a spring constant of 40 N / m.

Calculate the energy stored in the stretched bungee cord.

Use the correct equation from the Physics Equations Sheet.

_____

_____

_____

Energy = _____ J

(2)

(Total 7 marks)

Q6.

The diagram shows a wind turbine.

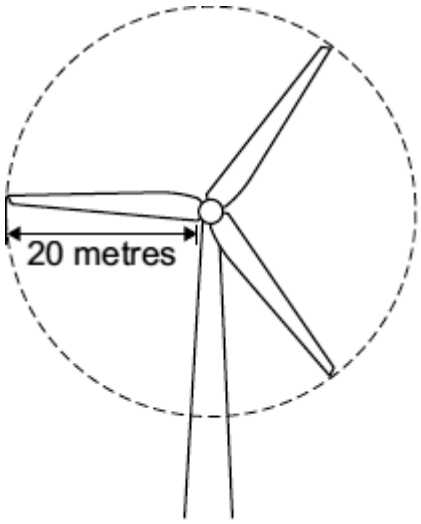

(a) The blades of the turbine are 20 metres long. On average, 15 000 kg of air, moving at a speed of 12 m/s, hit the blades every second.

Calculate the kinetic energy of the air hitting the blades every second.

Show clearly how you work out your answer.

_____

_____

Kinetic energy = _____ J

(2)

(b) Part of the kinetic energy of the wind is transformed into electrical energy.
The diagram shows that, for the same wind speed, the power output of a turbine, in kilowatts, depends on the length of the turbine blades.

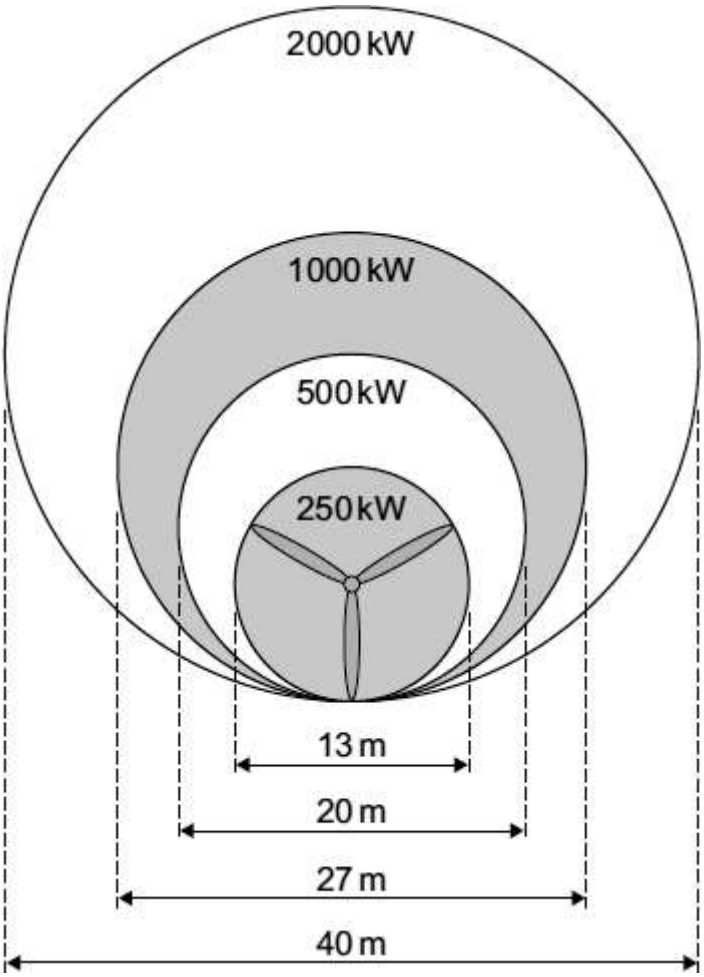

Give a reason why doubling the diameter of the blades more than doubles the power output of a turbine.

_____

_____

(1)

(Total 3 marks)

Mark schemes

Q1.

(a) (i) decreases (to zero)

1

resultant force acts in opposite direction to motion

accept air resistance and weight for resultant force

accept resultant force acts downwards

*do **not** accept air resistance increases*

1

(ii) velocity includes direction

or

velocity is a vector (quantity)

1

(b) (i) 3.6

allow 1 mark for correct substitution i.e.

½ × 0.05 × 12^2 provided no subsequent step

2

(ii) 3.6 **or** their (i)

1

(iii) 7.2

or

their (ii) ÷ 0.5 correctly calculated

*allow **1** mark for correct substitution i.e.*

3.6 or their (ii) = 0.05 × 10 × h

2

(iv) **B**

1

(c) range increases up to 45°

1

range decreases from 45°

the range is a maximum at 45° gains both marks

for any two angles that add up

to 90° the range is the same gains both marks

*the range increases then decreases gains **1** mark*

1

[11]

Q2.

(a) chemical

1

kinetic

1

in this order only

(b) $E_k = 0.5 \times 80 \times 12^2$

1

$E_k = 5760$ (J)

1

*an answer of 5760 (J) scores **2** marks*

(c) $E = 0.040 \times 480 \times 50$

1

$E = 960$ (J)

1

*an answer of 960 (J) scores **2** marks*

(d) increased

1

[7]

Q3.

(a) kinetic energy = 0.5 × mass × speed^2

allow $E_k = 1/2\ mv^2$

1

(b) $E_k = 0.5 \times 0.058 \times 5^2$

1

$E_k = 0.725$ (J)

*an answer of 0.725 (J) scores **2** marks*

1

(c) 0.725 (J)

allow ecf from (b)

allow the same amount of E_k as at A

1

(d) gravitational potential energy = mass × gravitational field strength × height

allow Ep = mgh

1

(e) $0.38 = 0.058 \times 9.8 \times h$

1

$$h = \frac{0.38}{(0.058 \times 9.8)}$$

1

h = 0.67 (m)

*an answer that rounds to 0.67 scores **3** marks*

1

[8]

Q4.

(a) gravity

accept weight for gravity
air resistance is insufficient

1

(b) (i) 800

*allow **1** mark for correct substitution ie*

$$P = \frac{2240}{2.8}$$

provided no subsequent step

2

(ii) 2240 J

1

(c) (i) (vertical) height

accept (height of) stairs

1

(ii) a fast / short time (for a lighter student) may give the greatest power

accept time is a factor

or

a slow / long time (for a heavy student) may give the least power

fitness is insufficient

1

[6]

Q5.

(a) any **two** from:

- bungee rope may snap
- rope may extend too much
- student may land in the river

2

(b) gravitational potential

correct order only

1

kinetic

1

elastic potential

1

(c) $\frac{1}{2} \times 40 \times 35^2$

1

24 500 (J)

accept 25 000 (J) (2 significant figures)

1

*allow 24 500 (J) with no working shown for **2** marks*

[7]

Q6.

(a) 1 080 000

*allow **1** mark for correct substitution*
ie ½ × 15 000 × 12 × 12

2

(b) any **one** from:

- KE (of wind) more than doubles
- mass of air (hitting blades) more than doubles
- area swept out by blades more than doubles
  *do **not** accept blades are larger / have a bigger area*
- area swept out by blades increases × 4

1

[3]